User manual

SKR002-1.539
ABS Trolley



SAIKANG Medical

Jiangsu Saikang Medical Equipment Co., Ltd.
STOCK CODE: 870098

Contents

Manual introduction 2

1. Installing guide .....**¡Error! Marcador no definido.**

2. Use method 6

    2.1 Use method of casters..... 7

3. Faults exclusion..... 8

4. Instrument trolley-maintenance 8

5. Packaging, transport, storage..... 9

6. After-sales service 9

Manual introduction

Note:

Please carefully read this manual and strictly follow the steps before installing and using. We require all users to have the knowledge of user's manual and all the cautions.

►This manual is applicable to SKR002-1.539 instrument trolley. It contains the installation method, operating instructions and maintenance check points.

►The graphics in this manual are for users' reference only. In actual use, please refer to the real object.

►This user manual includes the description, instruction, maintenance and technical parameters of the product.

►Any questions, please contact the after-sale service center or distributor.

►Anyone using or operating this product should read and comply with it.

►Except for some unexpected situations, users are required to be familiar with the usage and precautions.

1. Installation guide

ABS trolley

Picture



Technical parameters

Suitable for Use in Multiple Departments: Practical Multifunctional Cart

Model: SKR002-1.539 Dimensions: 539 × 366 × 915 mm

1. The tabletop is made using a single-step ABS injection molding process; the top, middle, and bottom shelves feature guardrails on three sides. The top shelf has a handrail on one side;
2. Equipped with 3-inch low-noise casters, two of which feature brakes;
3. The cart has a maximum load capacity of 50 kg. It operates quietly without unusual noises, making it ideal for hospitals to minimize disturbance to patients.



±5 mm

Packaging

Packaging Dimensions: 585 × 265 × 405 mm

Packaging volume: 0.06 m³



Gross 7.8 kg

Installation Guide

Warm reminder :

Please ensure that the trolley is installed correctly according to the manual.

Components



① Handrail*1 ② Single-hole guardrail sleeve*6 ③ Panel*3 ④ Double-hole rail covers*6 ⑤ Short rails*6 ⑥ Long rails*3 ⑦ Non-braked casters*2 ⑧ Braked casters*2 ⑨ Top-covering screws*2

Installation



1.As shown in the picture, install the handles and guardrails



2.After standing the unit upright, tighten the four posts; then install the guardrail sleeves. Use double-hole guardrail sleeves on the rear two posts and single-hole guardrail sleeves on the front two posts.



3. Install the long and short guardrails according to the front-to-back position of the tabletop.



4. Install the second layer of panels; make sure the front and back positions of the panels are aligned.



5.Tighten the four posts. guardrail sleeves.



6.The rear two posts use double-hole Single-hole railing sleeves for the first two posts.



7. Install the long and short guardrails according to the front-to-back position of the countertop.



8. Install the third layer of panels; ensure the front-to-back positions of the panels



9. Tighten the four casters. It is recommended to install the casters with diagonal brakes.



10. Right the cart; installation complete.

Application

Product applications: hospitals, medicine delivery, treatment, monitoring devices, electrocardiogram machines; beauty salons, nursing homes , welfare institutions, sanatoriums, hotels, pet stores, schools, 4S stores, etc.;

2. Use method



1-Main body 2-Casters

Instrument trolley size	Length	mm	539
	Width		366
	The height of the trolley above the ground		915
Weight	Safe Working load	KG	50

2.1 Use method of casters

2.1.1 Lock the caster: After pushing the trolley to the desired position, press the button and lock the caster when you hear a “click”, as shown in the figure below.

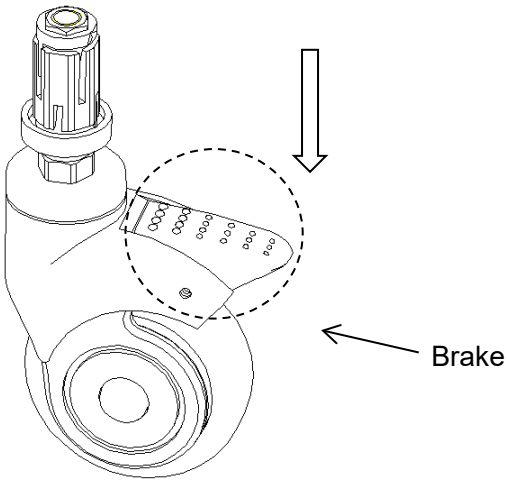

2.1.2 Unlock the caster: Lift the button with your foot and unlock the castor when you hear a “click”.

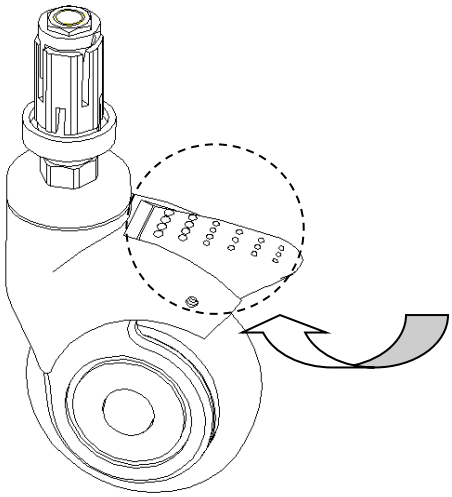

3. Faults exclusion

Common failures	Probable reasons	Excluding methods
Difficult to move the whole trolley	1. The caster is locked without releasing the brake 2. The caster is damaged	1. Release the brake 2. Replace the caster

4.Instrument trolley-maintenance

1. In order to use the trolley safely, safety inspections must be done regularly. Conduct a comprehensive inspection every six months, to ensure that there is no looseness in the connection parts can be operated normally.

2. When the instrument trolley reaches its maximum service life, the metal and plastic parts of the crib can be recycle.

3. Avoid hitting the crib and scratching the tube on the crib with sharp objects.

4. If the structure with stains, we suggest to clean it with water, don't use alkaline,corrosive chemicals to clean, avoiding rust on stainless steel surface.

5. Regularly check the casters to avoid hitting or overloading, which will cause damage to the casters.

6. It is forbidden to force the casters to brake when braking, which will cause damage to the brake system.

7. The wear of the tire surface of the wheel can be detected by visual inspection. Some thread spun yarn and other accumulations may be wrapped around the wheel, remove the bolts and nuts of the wheel, clean up the debris, and check whether the bearing of the wheel is damaged. If the parts are not damaged, can be reassembled and used.

8. Judging whether the caster is replaced by the whole caster according to the wear and tear. After the wheel is replaced or installed, make sure that the axle bolt and nut are connected reliably. If possible, use a lock washer or lock nut.

9. For the casters equipped with brakes, it is necessary to regularly check whether the brakes are working properly. Check the brakes once a day or before each use. For a instrument trolley equipped with multiple brake casters, only one brake caster can be locked at a time to try to push the trolley to check whether the brake performance of each caster is good. If the function of the caster brakes fails due to wear or damage to the wheels, immediately replace the wheels and then retest the brake system.

10.If the mechanism of the brake system of the caster is damaged, and the brake needs to be repaired or replaced, please contact our after-sales service department or an authorized dealer authorized by our company. Every time the brakes are replaced, the brake performance of the casters needs to be retested.

5.Packaging, transport, storage

1. The packaging of instrument trolley is carried out according to the contract or product standard.
2. Avoid rushing out, violent vibration, and protection from sunlight and rain during the transportation of the instrument trolley.
3. The instrument trolley should be stored:
a) Ambient temperature: -40℃ ~ 70℃.
b) Relative humidity: ≤ 95%.
c) Atmospheric pressure: 500hPa ~ 1060 hPa.

6.After-sales service

1. Please keep the files come with the machine and invoices of this product properly, and you need to present these materials when the company performs warranty and maintenance for the product.
2. If there is any problems in the process of using, please contact our company in time, so that our company can provide you with accurate and fast technical support and maintenance services in a timely manner.
3. Do not disassemble the internal device of this product by yourself to avoid unnecessary damage. If you find that the use is affected due to quality problems, please contact our after-sales service department or our authorized dealer.
4. From the date of purchase, if it is indeed damaged or does not work normally due to quality problems within one year, the company will repair the product for users free of charge.
5. Lifetime service from manufacturer: JIANGSU SAIKANG MEDICAL EQUIPMENT CO LTD

MODEL:SKR002-1.539 | REF.: 319-SKR002-1.539

CARRO HOSPITALARIO Y MÉDICO / MEDICAL TROLLEY / CHARIOT MÉDICAL / CARRELO SANITARIO / CARRO MÉDICO / MEDIZINISCHER WAGEN

Jiangsu Saikang Medical Equipment Co.,Ltd
No. 35 Lehong Road, Modern Agriculture
Demonstration Park, Zhangjiagang City,
Jiangsu Province, China

EC REP

SUNGO Europe B.V.
Fascinatio Boulevard 522, Unit 1.7,
2909VA Capelle aan den IJssel,
The Netherlands

CE MD

Quirumed S.L.U. CIF B97267405
C/Corretger 117 Pq.Emp.Tactica,Paterna,
46980, Valencia(Spain)

LOT:HW25043

2025-09-16

SAIKANG Medical

Jiangsu Saikang Medical Equipment Co., Ltd.

STOCK CODE: 870098

No. 35, Lehong Road · Zhangjiagang (Jiangsu) · China

+86 18021231901

sales@chinasaikang.com

www.saikangmedical.com