User manual

B6e8y
Electric Hospital Bed

Registration code: SKD-C

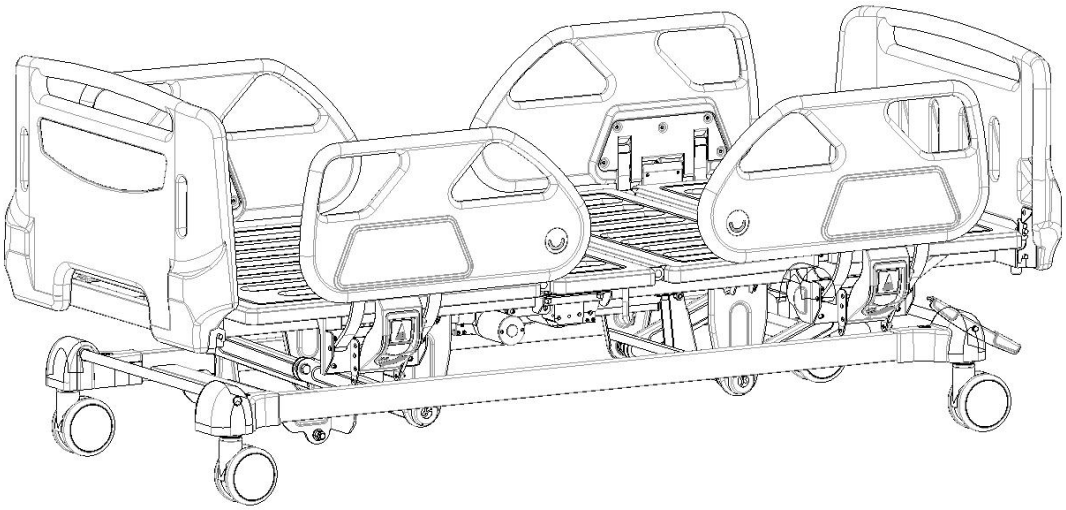

SAIKANG Medical

Jiangsu Saikang Medical Equipment Co., Ltd.

STOCK CODE: 870098

Contents

Manual Introduction 2

1. Installing guide 3

    1.1 List of standard accessories 3

    1.2 Casters installation 5

    1.3 Side guardrails installation 6

    1.4 Head board & Foot board assembly method 7

    1.5 Drainage hook installation 7

    1.6 IV pole installation 8

2. Product description 9

    2.1 Use method of casters 10

    2.2 Use method of guardrails 11

    2.3 Use method of IV pole 12

    2.4 Use method of hand controller 13

3. Spare part replacement and maintenance 14

    3.1 Side guardrails replacement and maintenance 14

    3.2 Motor replacement and maintenance 15

4. Faults exclusion 16

5. Bed-maintenance 17

6. Mattress-cleaning and maintenance 18

7. Caster-detection and maintenance 18

8. Guardrail-maintenance 19

9. Packaging, transport, storage 20

10. After-sales service 21

Manual Introduction

Hospital beds are essential equipment for the well-being, treatment and recovery of bedridden patients. Hospital beds allow patients to remain in more comfortable positions as well as in positions sometimes recommended by doctors, which would be very difficult in a normal bed, where one would always have to be placing or removing supports. Hospital beds can be manual or automatic. The automatic hospital bed has its functions controlled by buttons on the side panels of the bed or via remote control. The manual hospital bed has 2 movements triggered by cranks, having the elevation of the headboard, which facilitates the moment of feeding, also avoiding refluxes and facilitating breathing and also has elevation of the part of the feet that will cause it to improve the blood circulation of the lower limbs, in view of the long period that the patient will spend lying down. On the other hand, patient safety is very important at this time of recovery, so all of our beds have a side protection rails, preventing the patient from going at night and running risks of falling.

Note:

Please carefully read this manual and strictly follow the steps before installing and using. We require all users to have the knowledge of user's manual and all the cautions.

►This manual is applicable to B6e8y electric hospital bed. It contains the installation method, operating instructions and maintenance check points.

►The graphics in this manual are for users' reference only. In actual use, please refer to the real object.

►This user manual includes the description, instruction, maintenance and technical parameters of the product.

►Any questions, please contact the after-sale service center or distributor.

►Anyone using or operating this product should read and comply with it.

►Except for some unexpected situations, users are required to be familiar with the usage and precautions.

1. Installing guide

1.1 List of standard accessories

After opening the packing case, please check whether the following parts are complete in the packing case:

Table a:

NO.	Name	Picture	Specification	QTY	Unit
1	Head board	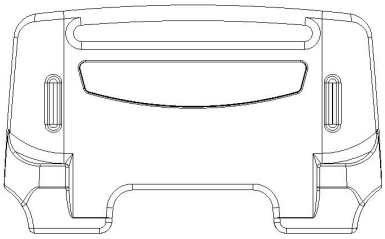	Hook distance: L755*H55mm	1	pc
2	Foot board	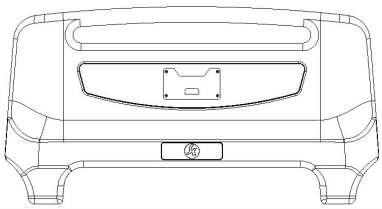	Hook distance: L755*H55mm	1	pc
3	Side rail (left)	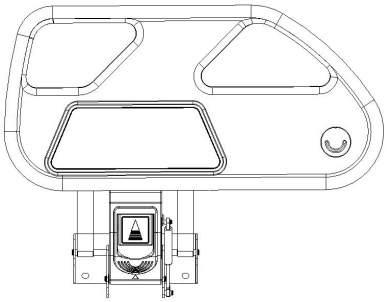	L750*H345*W32mm	2	pcs
4	Side rail (right)	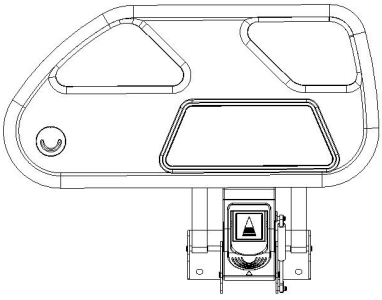	L750*H345*W32mm	2	pcs

5	Caster	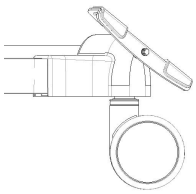	5 inch central-locking caster，2 with braking pedals	4	pcs
6	IV pole	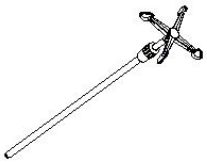	Φ16-19mm/off white hook	1	pc
7	Bed platform	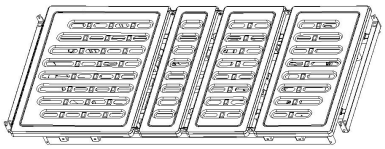	L1925*W900mm	1	pc
8	Screw	/	Refer to Table a.1	1	set

Table a.1:

NO.	Name	Picture	Specification	QTY	Unit
1	30-50 drainage hook	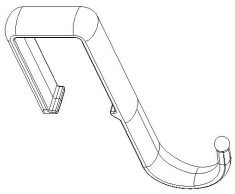	30-50(plastic)	2	pcs
2	Hexagon screw	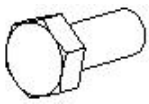	M8*20mm	16	pcs
3	Flat washer	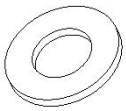	Φ8*Φ16*H1.2mm	16	pcs
4	Spring washer	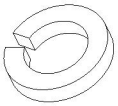	Φ8*Φ14*H2.5mm	16	pcs
5	Nut		M8mm	16	pcs

6	Hexagon screw		M8*16mm	8	pcs
7	Flat washer	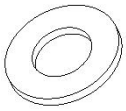	Φ8*Φ16*H1.2mm	8	pcs
8	Spring washer	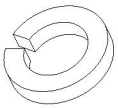	Φ8*Φ14*H2.5mm	8	pcs

1.2 Casters installation

Use a 13-inch open-spanner to unscrew the nut, take out the bolt, flat spring washer, brake pedal, hexagonal bar steel, etc., install the caster, insert the bolts into the mounting holes of the base and casters, and tighten the nut.

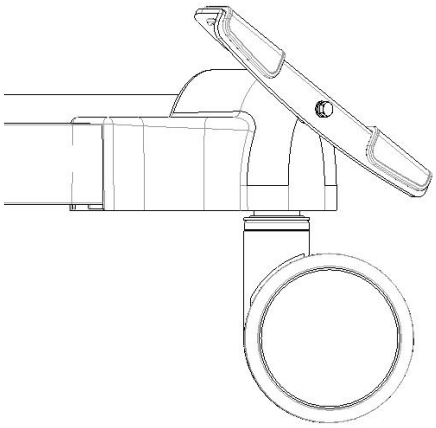

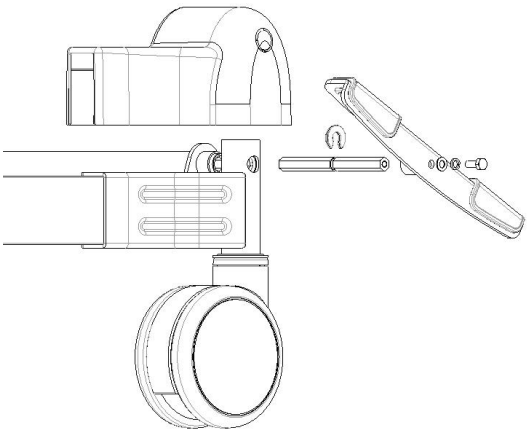

1.3 Headboard & Footboard assembly method

(The picture does not exactly match the real product, only for the installation instructions)

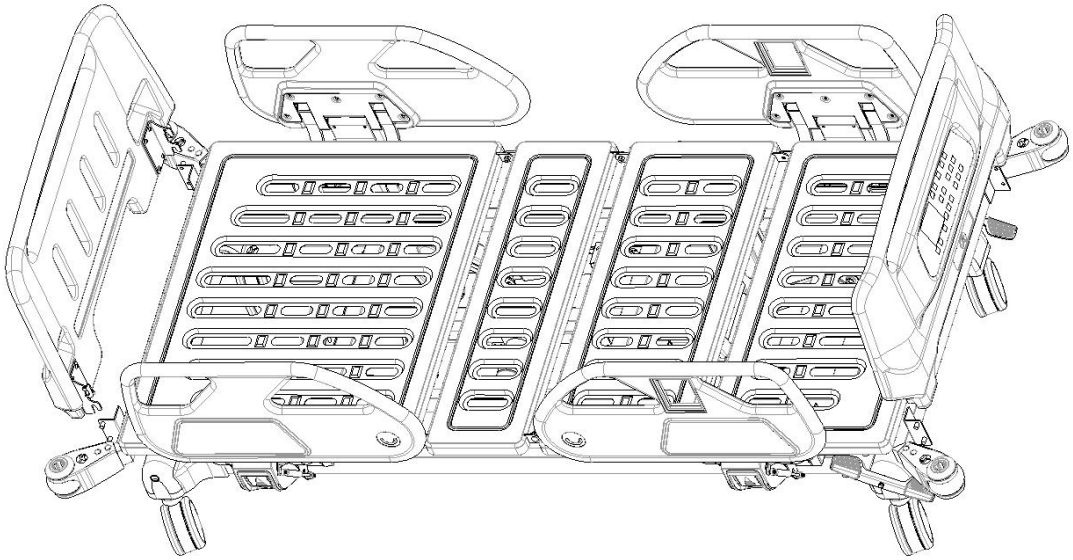

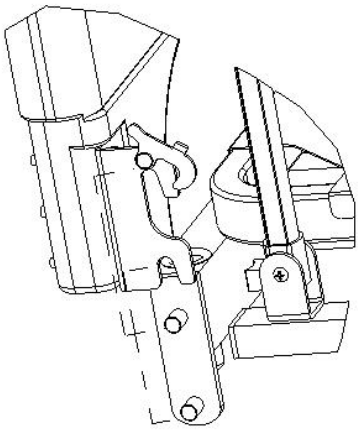

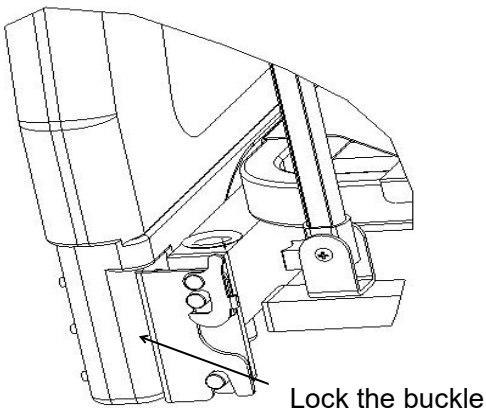

1.4 Drainage hook installation

(The picture does not exactly match the real product, only for the installation instructions)
Fasten the drainage hook down on the bed frame, as shown in the figure below

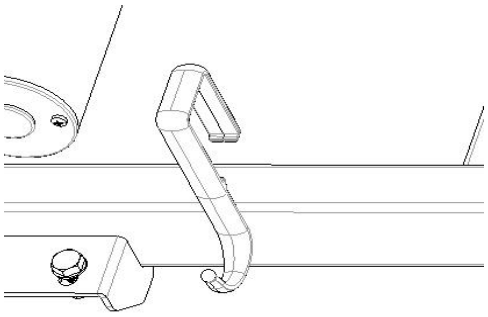

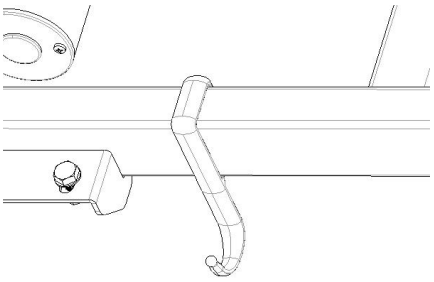

1.5 Side guardrails installation

Place the bed upright and install the guardrail, (**The picture may not exactly match the real product; this is only for installation instructions**)

Take out the screw as shown below, and use a 14-inch hex wrench.

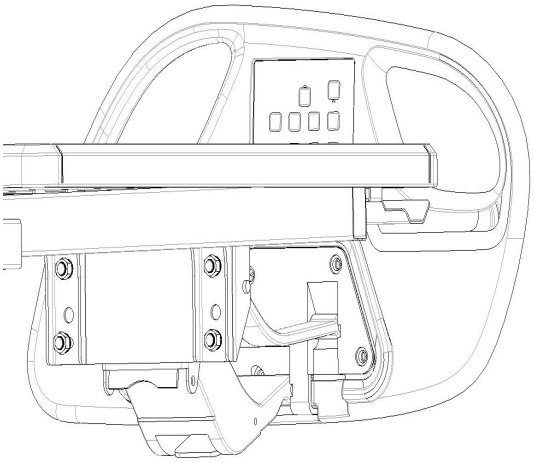

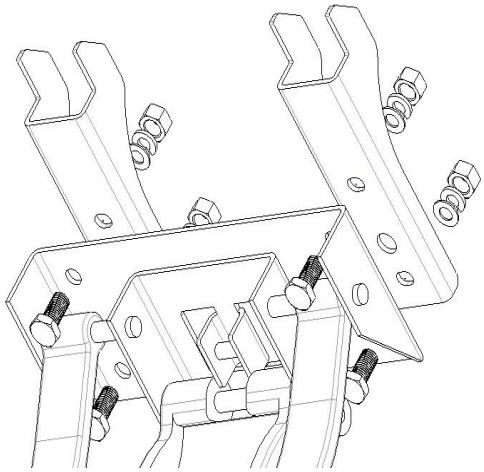

1.6 IV pole installation

Female part installation: Press the plastic hook (female part) down on the Φ 16mm stainless steel pipe.

Male part installation: Place the plastic hook (male part) directly above the female part in a cross shapes, and then aligns the buckles on the male part with the slots on the female part and press down. After hearing a "click", check whether the end of the buckle is tight, if it is tight, then complete the installation, if not, continue to press down until the buckle is tight.
Insert the installed IV pole vertically into the IV pole prevision. (The arrow in the picture shows the IV pole prevision)

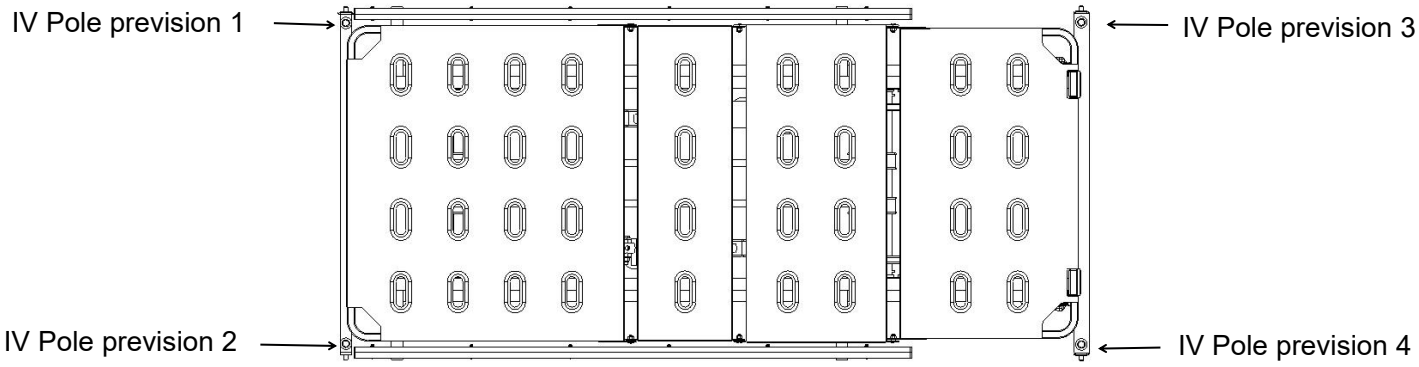

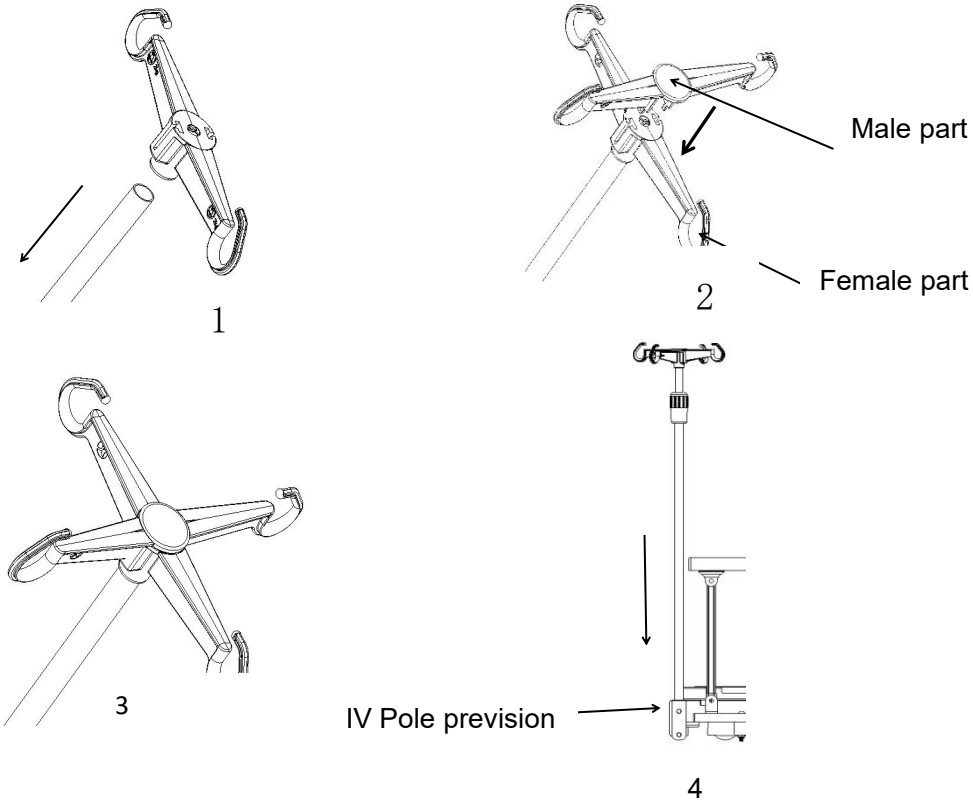

2. Product description

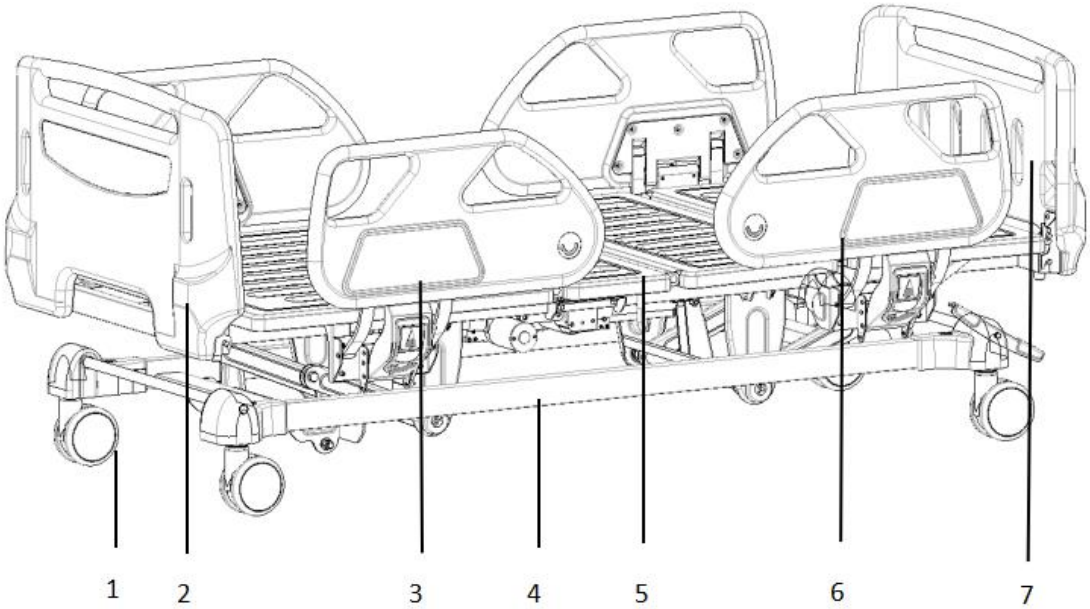

Specific use:

1-Casters 2-Headboard 3-Guardrail 4- Bed frame

5-Bed surface board 6-Guardrail 7- Footboard

Bed surface size	Length	mm	1925±10
	width		900±10
	The lowest height of the bed from the ground		435±10
Dimensions	Length		2170±10
	Width		1060±10
	Height		435-745±10
Tilt range	Back board	/	0-75±5°
	Leg board		0-35±5°
Weight	Safe working load	KG	250

2.1 Use method of casters

⚠ When there is a patient on the bed, the guardrail should be raised before moving the bed.

⚠ Except when the bed must be moved, the caster brake must be stepped on during the rest of the time. Need to de-press all four wheel brakes.

This bed uses a centrally controlled side brake; all four wheels can be locked by controlling the brake lever on one side.

Press the red foot lever down to lock all casters.

Press the green foot lever down to unlock all casters.

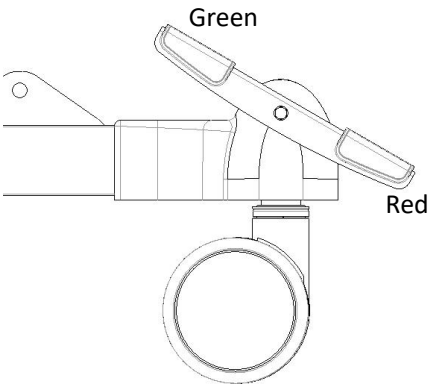

Locked state

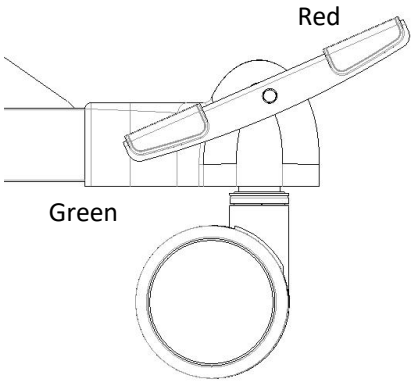

Unlocked state

2.2 Use method of guardrails

2.2.1 Raising and lowering the guardrail

(The picture does not exactly match the real product, only for the installation instructions)
Raising guardrails: Hold the upper guardrail pulled up, a "click" sound indicates the guardrail has been locked. The picture is as follows:

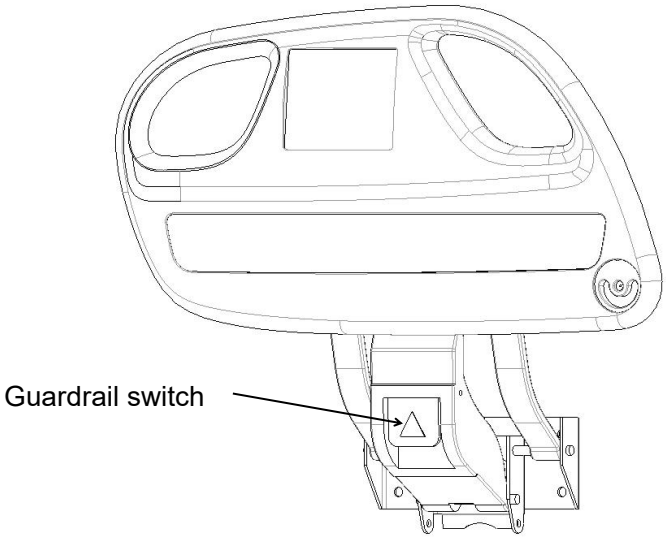

Lowering the guardrail: Pull Guardrail switch outwardly, and hold the upper guardrail while slowly putting down the guardrail. The picture is as follows:

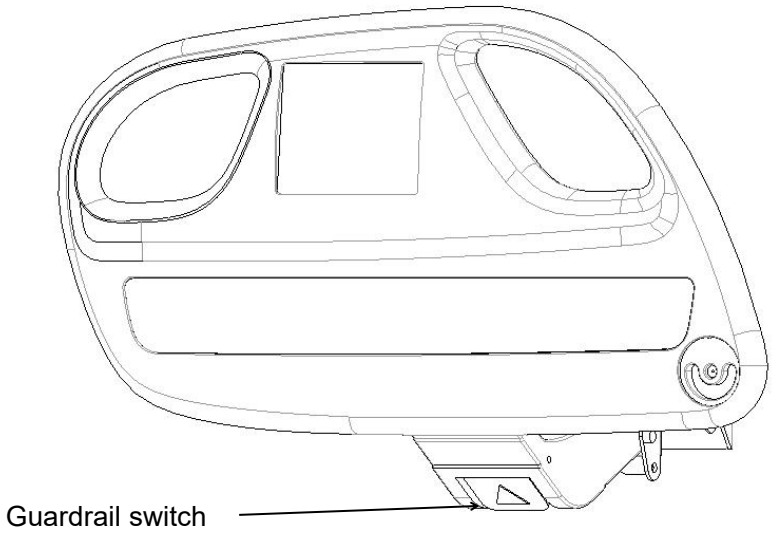

2.3 Use method of IV pole

Adjusting the height of the IV pole:

1. First loosen the outer sleeve counter clock carefully, insert the inner tube of the IV pole into the outer sleeve, and then adjust the length of the extension rod up and down;

2. Second adjust the required length, and then tighten the outer sleeve clock carefully. The maximum bearing of each hook is 2kg, a total of 8kg.

(Height Adjustment : 890--1540mm)

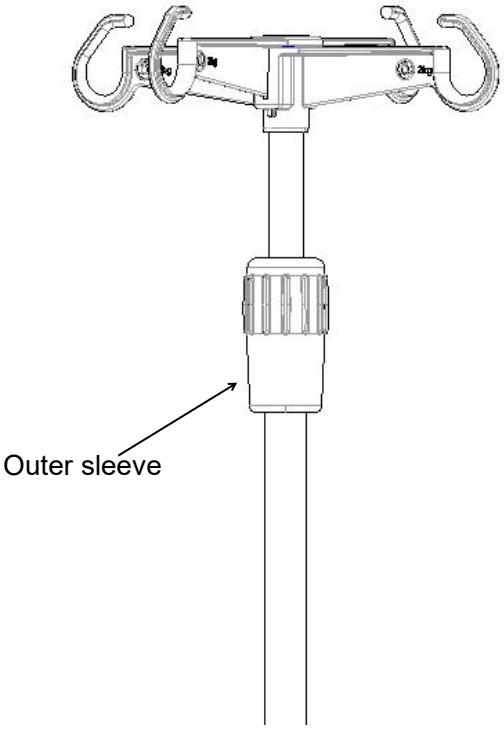

2.4 Use method of hand controller

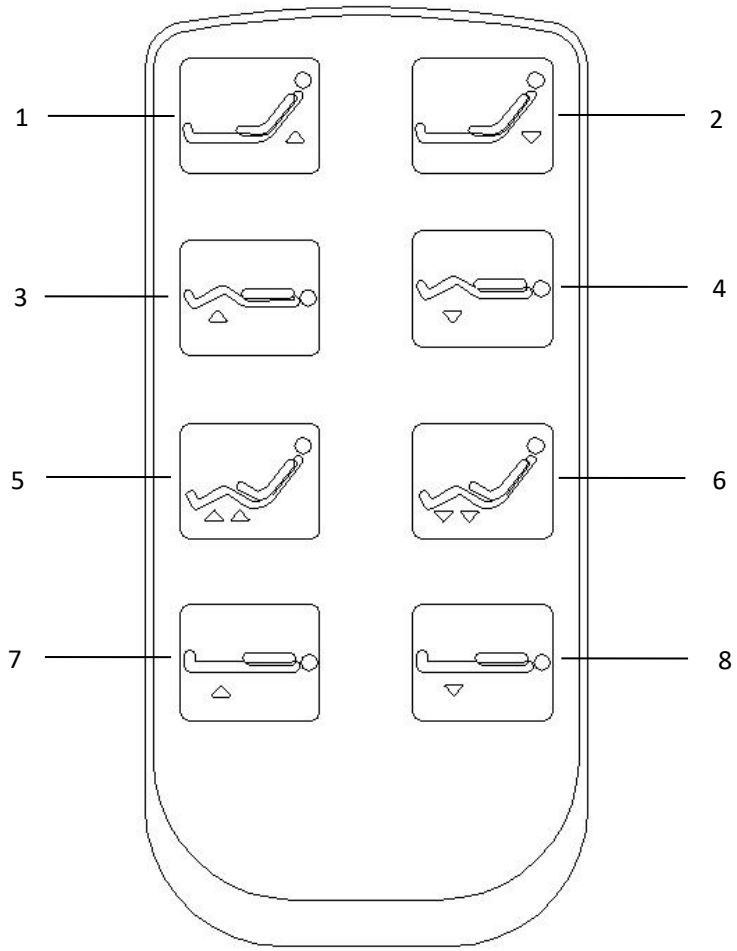

1: Back up button
2: Back down button
3: Leg up button
4: Leg down button
5: Back and leg linkage up（auto-contour） button
6: Back and leg linkage down（auto-contour）button
7: Whole bed up button
8: Whole down Button

3. Motor replacement and maintenance

3.1 Side guardrails replacement and maintenance

Use 2pcs 17-inch Allen wrenches to unscrew the nut, take out the nut, spring washer; flat washer and screw, then remove the side guardrail.

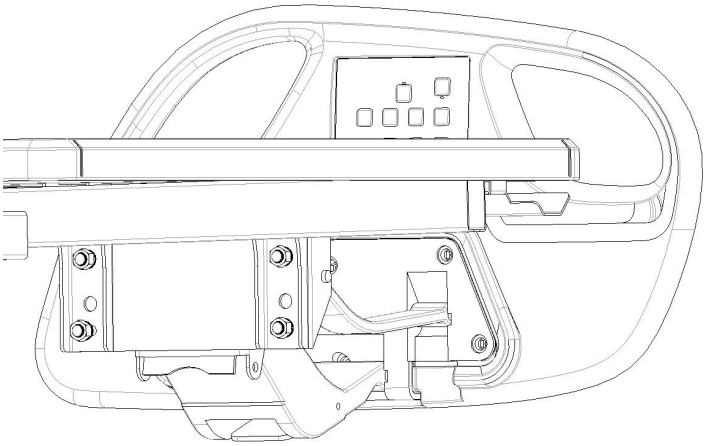

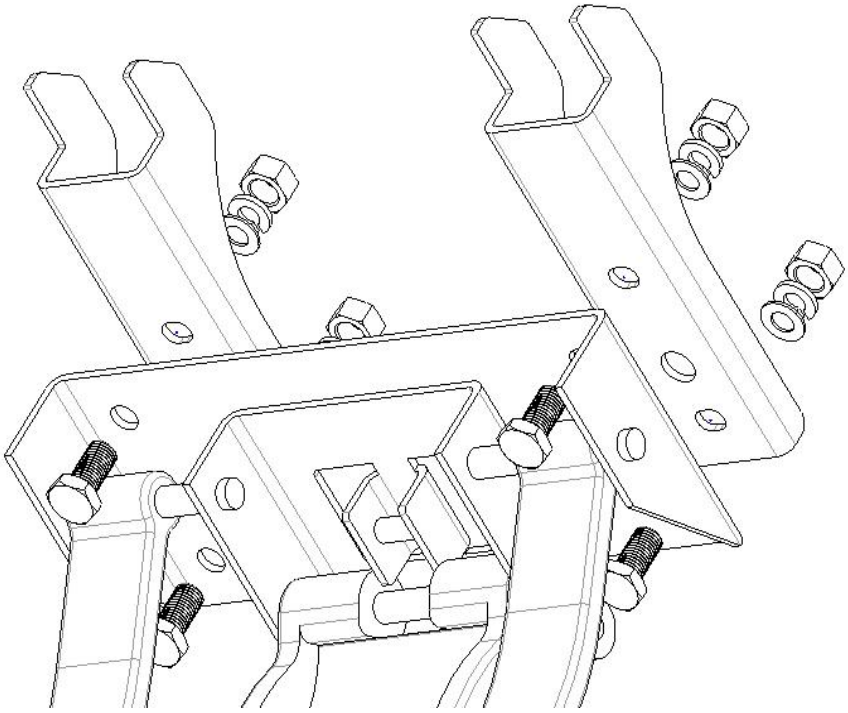

3.2 Motor replacement and maintenance

Use 2pcs Allen wrenches 17-inch to unscrew the motor, take out the bolt, and replace the motor. When the replacement is completed, install the bolts in the order shown in the figure, and use the wrench to tighten the nut.

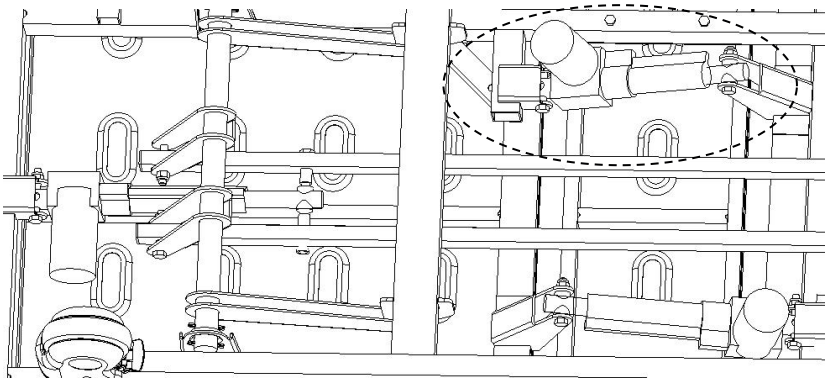

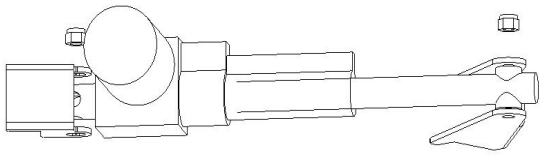

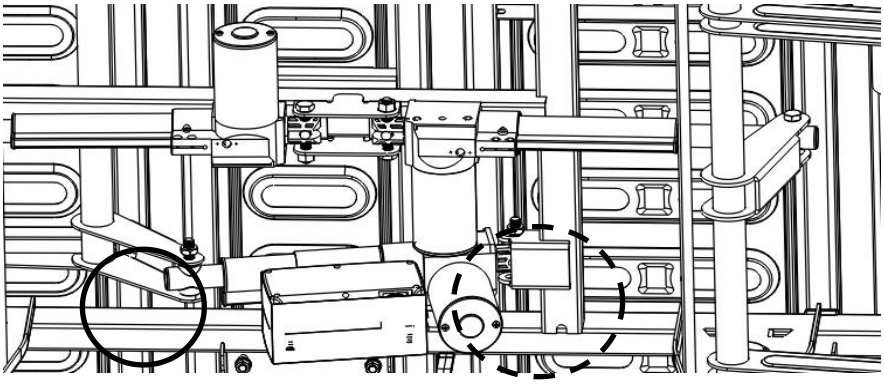

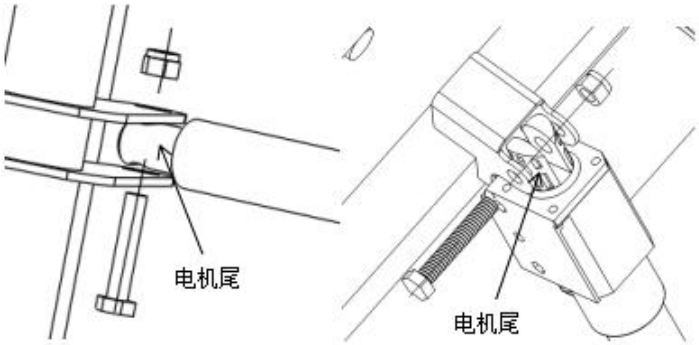

4. Faults exclusion

Common failures	Probable reasons	Exclusion methods
Difficult to move the whole bed	1. The caster is locked without releasing the brake 2. The caster is damaged	1. Release the brake, check 2.1 2. Replace the caster,check1.1
Guardrail easy to loosen	The guardrail is not stuck in place	Lift the guardrail upward again and let go of the hand after hearing a "click"
Loud noise when the bed board moves up and down	The moving parts are rusted and the lubrication is insufficient	Add proper amount of lubricating oil at the joint of moving parts
Part of the bed does not work	The hand controller button fails	Replace the hand controller
The electric bed does not work	Unplugged and no power on	Insert the plug and turn on the power

5. Bed-maintenance

1. In order to use the bed safely, safety inspections must be done regularly. Conduct a comprehensive inspection every six months, to ensure that there is no looseness in the connection parts and the function of up & down for the bed can be operated normally.

2. At the joints of the frequently moving parts of the bed, an appropriate amount of lubricating oil needs to be added during daily inspection; if serious damage is found, it should be replaced immediately to ensure safety, add lubricated parts as show.

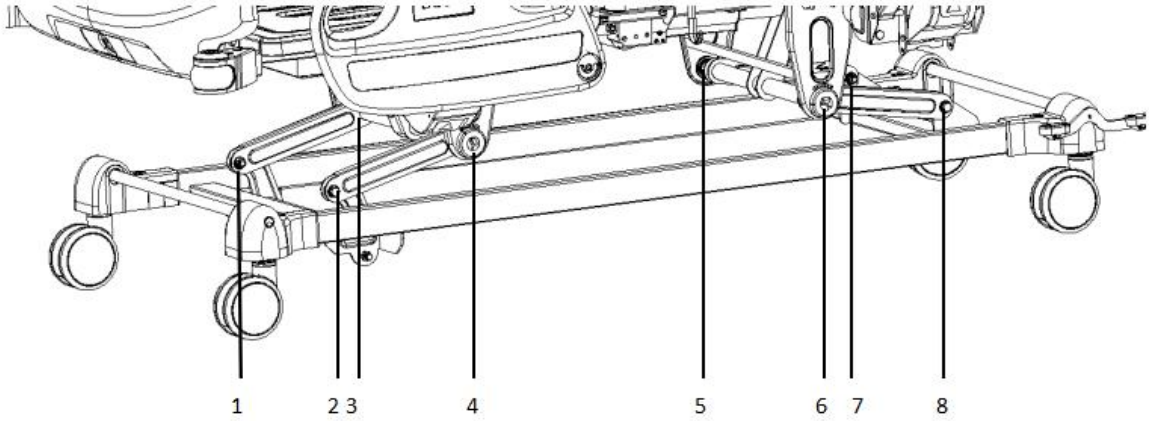

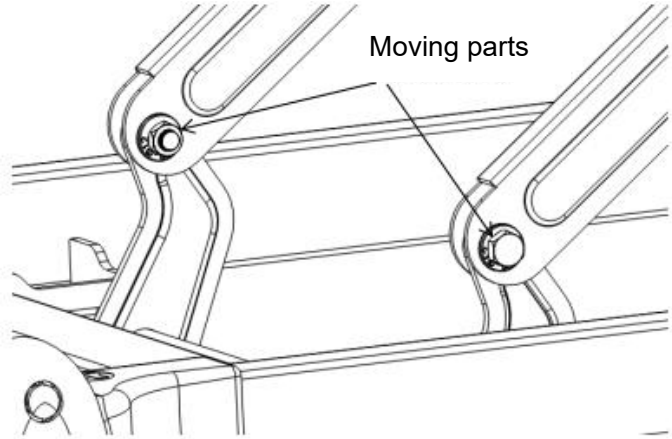

3. Avoid hitting the bed and scratching the coating on the bed with sharp objects.

4. Please avoid inhaling moisture into the bed and mattress, which will cause rust, abnormal noise and bacteria breeding. If water adheres, wipe it off immediately.

5. When the bed frame ages and it reaches a certain servicing time, the metal part of the bed and the plastic parts of the headboard or footboard, guardrail can be recycle.

6. Mattress-cleaning and maintenance

1. When using it, avoid scratching the fabric with sharp-angled tools or knives, cover it with sheets or cleaning pads, and clean it frequently to protect it from dryness.

2. Clean the mattress regularly with a vacuum cleaner, Mattress cover can be washed in 100℃.

3. Expose the mattress often to keep the sleep fresh and comfortable, but be careful not to expose the mattress to too long.

4. If the fabric is accidentally stained, please refer to the corresponding recommended cleaning methods in the instructions; do not use corrosive chemicals to clean the fabric.

5. If accidentally the chewing gum or other jellies get on the fabric, do not wipe it forcibly. Use an ice pack to allow it harden and gently peel it off.

6. If the thread is found to be loose due to wear and tear, do not pull it off by hand, use scissors to cut it together.

* If your order does not have a mattress, please refer to the contract configuration.

7. Caster-detection and maintenance

1. Regularly check the casters to avoid hitting or overloading, which will cause damage to the casters.

2. Grease the casters or wheels on a regularly, and the frequency of addition should be determined according to the specific actual use conditions. In general, lubricating grease is added every six months.

3. After cleaning the caster equipment, pay attention to adding grease. The selection of lubricating grease should be based on the actual use environment, especially high and low temperature environment, and the corresponding lubricating grease should be selected.

4. It is forbidden to force the casters to brake when braking, which will cause damage to the brake system.

5. The wear of the tire surface of the wheel can be detected by visual inspection. Some thread spun yarn and other accumulations may be wrapped around the wheel, remove the bolts and nuts of the wheel, clean up the debris, and check whether the bearing of the wheel is damaged. If the parts are not damaged, can be reassembled and used.

6. Judging whether the caster is replaced according to the time used, wear and tear, you can replace the wheels and make sure that the axles bolt and nuts are well put together and connected. If possible, use a lock washers or locknuts to help you with this process.

7. For the casters equipped with brakes, it is necessary to regularly check whether the brakes are working properly. Check the brakes once a day or before each use. For a hospital bed equipped with multiple brake casters, only one brake caster can be locked at a time which will allow you to try and push the bed also check if, whether one of the brake performance of each caster is good. If the function of the brake fails due to wear or damage to the wheels, immediately replace the wheels and then retest the brake system.

8, if the mechanism of the brake system of the caster is damaged, and the brake needs to be repaired or replaced, please contact our after-sales service department or authorized dealer provide by our company. Every time the brakes are replaced, the brake performance of the casters must be retested.

8. Guardrail-maintenance

1. Please check whether the side rails are installed correctly to prevent the lying patient from shifting and rolling down.

2. Please always check the screws of the total position of the guardrail and the wire of the guardrail to prevent loosening and falling off.

3. Please use the red plastic parts of the guardrail switch correctly, and do not use brute force to prevent it from damaging the guardrail.

9. Package, transport, storage

1. The packaging of electric bed is carried out according to the contract or product standard.

2. Avoid rushing out, violent vibration, and prevent from sunlight and rain during the transportation of the electric bed.

3. The electric bed should be stored:

a) Ambient temperature: +5℃ ~ +40℃.
b) Relative humidity: ≤ 85%.
c) Atmospheric pressure: 70 kPa ~ 106 kPa.
d) Power voltage: AC 100-220±22V;
e)Power frequency: 50±5 Hz

4. The equipment is with internal power supply, and the protection type is Type B.
A) Working voltage: DC 24V.
B) Input power: 500VA.
C) Fuse model and rating: F3AL 250V, 5×20mm
D) Working schedule: intermittent loading and continuous operation
E) Ingress protection: IPX4
F) Non-AP /APG devices

Symbol Interpretation：

Note! Check the file that comes with the bed

IPX4 Ingress protection

Class II equipment for electrical safety

Protective grounding

10. After-sales service

1. Please keep the files that comes with the machine and invoices of this product properly and you need to present these files when the company performs warranty and maintenance for the product.

2. If there is any problem in the process of using, please contact our company in time, so that our company can provide you with accurate and fast technical support and maintenance services in a timely manner.

3. From the date of sale, if the product is not broken or damaged during to the installation and followed correctly the specification according to the manual, the product will benefit one-year free warranty and long term maintenance service with the "certificate" or invoice.

4. Do not disassemble the internal device of this product by yourself to avoid unnecessary damage. If you find that the use is affected due to quality problems, please contact our after-sales service department or our authorized dealer.

5. From the date of purchase, if it is indeed damaged or does not work normally due to quality problems within one year, the company will repair the product for the user for free.

6. After-sales Service company: JIANGSU SAIKANG MEDICAL EQUIPMENT CO LTD.